ACECO

Valve, Inc.

PV3

PV4

Model PV 3 & PV 4 Pig Valves

Features

- Compact body style for bolting between line flanges. Space saving. See dimension chart for end to end lengths.
- During pig loading and retrieving, by-pass design permits 72 to plus 100 percent of product flow, depending on pipe schedule.
- No tools required for removing or replacing bonnet plug.
- Vent/bleeder valve permits the relieving of pressure from the bonnet pig chamber for safety before removing bonnet plug.
- Equalizer valve opens to pressurize bonnet pig chamber to create low torque operation.
- Pig launching and removal is performed easily and safely.
- Back-seated stem prevents blowout.
- Stem lubrication fitting standard.
- 90° stem rotation and locking plates standard.
- Valves are field convertible from launching type to receiving type or vice-versa.
- Pig receiving ball contains pig stop plate rigidly positioned to stop pig.
- Lower seat is spring energized to force ball upward to create initial seal against upper seat to isolate bonnet pig chamber. Line pressure then increases seat sealing.
- In-line field repairable
- Materials available for all requirements.
- Materials per Nace specification MR-01-75 standard
- Manufactured in compliance to ISO 9000 standards for quality control.
- Bonnet plug color coded for proper field installation "green" for launching valves "red" for receiving valves.
- Correct size grade B-7 installation cap screws furnished with valves.

Operating Procedure

Launching

The launching valve is installed in the flow line with the bonnet plug facing vertically upward within 0-45 degrees.

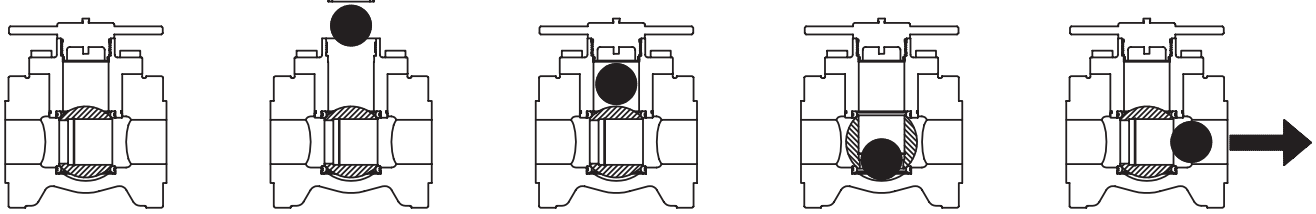

With ball as shown open vent/bleeder valve

Remove pig bonnet plug
Load Pig
Close vent/bleeder valve

Replace bonnet plug
Open equalizer valve

Rotate ball as shown
Pig drops inside ball
Close equalizer valve
Note: flow by-passes around ball

Rotate ball as shown
Pig is launched

Receiving

The receiving valve is installed in the flow line with the bonnet plug facing verticlly downward within 0-45 degrees.

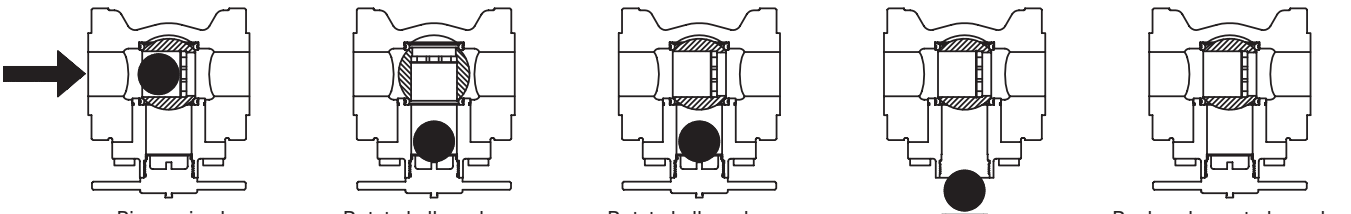

Pig received
Pig stop in ball catches pig
Open equalizer valve

Rotate ball as shown
Pig drops to bonnet plug
Note: Flow by-passes around ball

Rotate ball as shown
Close equalizer valve
Open vent/bleeder valve

Remove bonnet plug and pig
Close vent/bleeder valve

Replace bonnet plug valve is ready to receive next pig

BI-DIRECTIONAL FLOW OPERATION STANDARD ON LAUNCHING AND RECEIVING PIG VALVES

Parts List for Model PV3

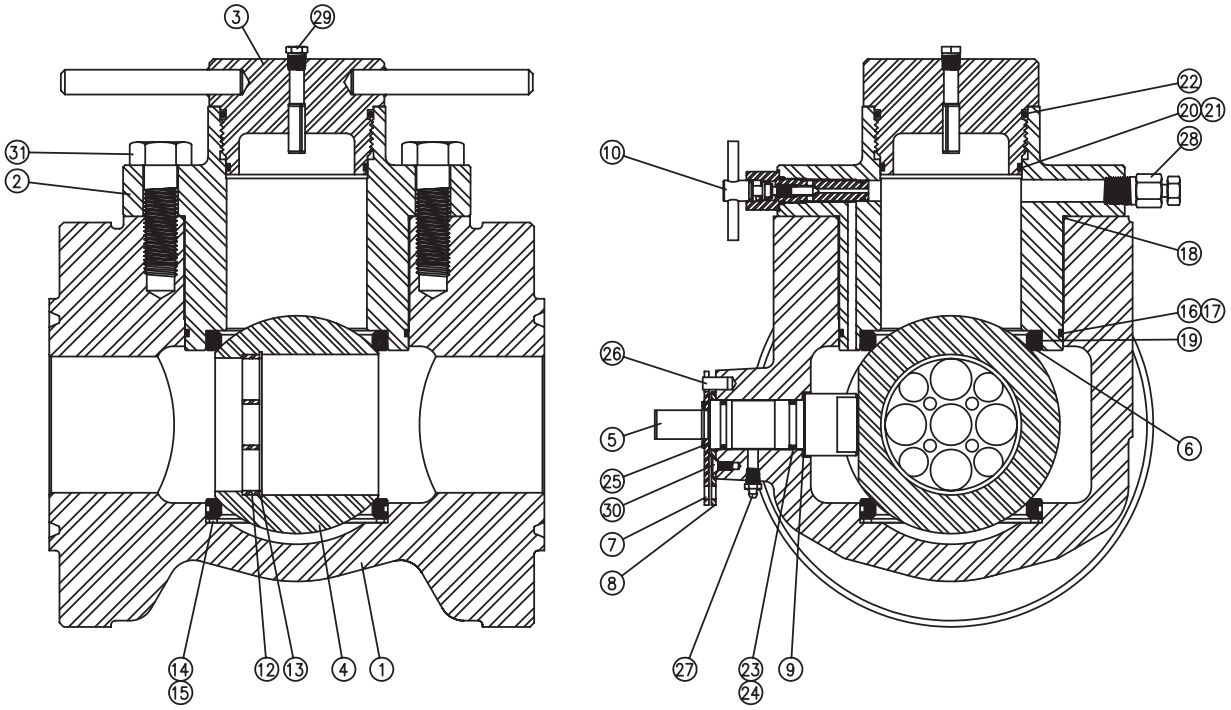

Item No.	Part Name
1	Body
2	Bonnet
3	Pig Entry Plug
4	Ball
5	Stem
6	Seat
7	Stop Plate
8	Lock Plate
9	Stem Thrust Bearing / Spacer
10	Equalizer Valve Assembly
11	Handle
* 12	Pig Stop
* 13	Pig Stop Retainer Ring
14	Wave Spring
15	Shim
16	Bonnet / Body Seal
17	Bonnet / Body Back-up Ring

* FOR RECEIVING PIG VALVES ONLY

Item No.	Part Name
18	Bonnet / Body Weather Seal
19	Seat Seal
20	Pig Entry Plug Seal
21	Pig Entry Plug Back-up Ring
22	Pig Entry Plug Weather Seal
23	Stem Seal
24	Stem Back-up Ring
25	Retainer Ring
26	Stop Pin
27	Stem Lubrication Fitting
28	Body Vent / Bleeder Fitting
29	Pipe Plug
30	Lock Plate Retaining Screw
31	Cap Screw
32	Name Plate
33	Drive Screw

NOT SHOWN 11, 32, 33

Dimensions for Model PV3

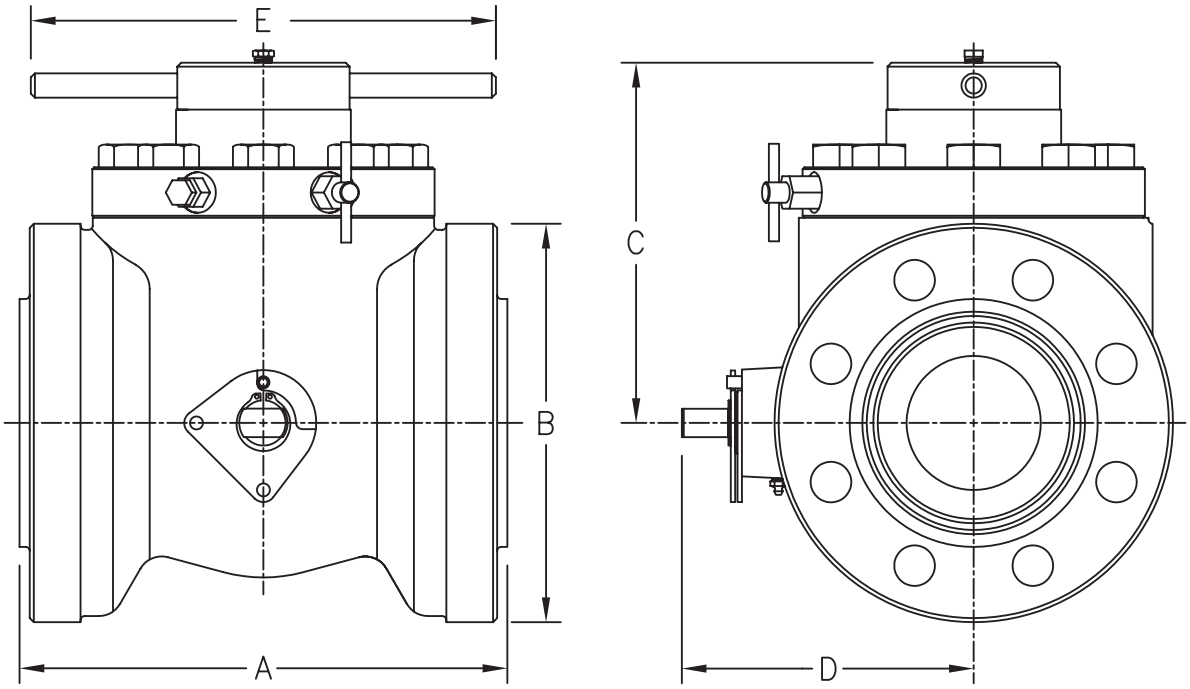

Valve Size		A	B	C	D	E	Handle Length
3"	600 RF	11.375	8.25	8.63	7.34	10.30	16
	600 RTJ OR 2000 API	11.375	8.25	8.63	7.34	10.30	
	900 RF	12.500	10.50	9.83	7.97	10.30	
	900 RTJ OR 3000 API	12.500	10.50	9.83	7.97	10.30	
	1500 RF	12.500	10.50	9.83	7.97	10.30	
	1500 RTJ OR 5000 API	12.500	10.50	9.83	7.97	10.30	
4"	600 RF	13.625	10.75	10.25	8.34	12.30	16
	600 RTJ OR 2000 API	13.625	10.75	10.25	8.34	12.30	
	900 RF	15.000	12.25	11.07	8.97	12.30	
	900 RTJ OR 3000 API	15.000	12.25	11.07	8.97	12.30	
	1500 RF	15.000	12.25	11.07	8.97	12.30	
	1500 RTJ OR 5000 API	15.000	12.25	11.07	8.97	12.30	
6"	600 RF	16.875	14.00	12.72	10.28	14.38	16
	600 RTJ OR 2000 API	16.875	14.00	12.72	10.28	14.38	
	900 RF	18.250	15.00	13.41	11.22	14.38	
	900 RTJ OR 3000 API	18.250	15.00	13.41	11.22	14.38	
	1500 RF	18.250	15.50	13.41	11.22	14.38	
	1500 RTJ OR 5000 API	18.250	15.50	13.41	11.22	14.38	
8"	600 RF	20.750	16.50	15.62	13.05	16.50	16
	600 RTJ OR 2000 API	20.750	16.50	15.62	13.05	16.50	
	900 RF	22.750	18.50	16.88	14.30	16.50	
	900 RTJ OR 3000 API	22.750	18.50	16.88	14.30	16.50	
	1500 RF	24.000	19.00	16.88	14.30	16.50	
	1500 RTJ OR 5000 API	24.000	19.00	16.88	14.30	16.50	
10"	150 RF POLY PIPE	22.000	17.75	22.94	13.05	17.50	16
	300 RF POLY PIPE	22.000	17.75	22.94	13.05	17.50	
12"	150 RF POLY PIPE	16.125	18.50	16.88	14.85	19.50	
	300 RF POLY PIPE	16.125	18.50	16.88	14.85	19.50	

DESIGN AND SPECIFICATIONS SUBJECT TO CHANGE WITHOUT NOTICE
CONSULT FACTORY FOR OTHER SIZES AND PRESSURE CLASSES

Percent of by-pass product flow with ball closed to load or retrieve pig

Pipe Schedule		Pipe I.D.	Pipe Flow Area Sq. In.	Valve By-Pass Area Sq. In.	Flow By-Pass Area %
2"	40	2.067	3.355	4.352	129.7
	80 XS	1.939	2.952	4.352	147.4
	160	1.689	2.240	4.352	194.2
	XXS	1.503	1.774	4.352	245.3
3"	40	3.068	7.393	6.556	88.6
	80 XS	2.900	6.605	6.556	99.2
	160	2.642	5.408	6.556	121.2
	XXS	2.300	4.154	6.556	157.8
4"	40	4.026	12.730	9.914	77.8
	80 XS	3.826	11.497	9.914	86.2
	120	3.624	10.315	9.914	96.1
	160	3.438	9.283	9.914	106.7
	XXS	3.152	7.803	9.914	127.0
6"	40	6.065	28.890	21.042	72.8
	80 XS	5.761	26.066	21.042	80.7
	120	5.501	23.766	21.042	88.5
	160	5.189	21.147	21.042	99.5
	XXS	4.897	18.834	21.042	111.7
8"	40	7.981	50.027	37.437	74.8
	60	7.813	47.943	37.437	78.0
	80 XS	7.625	45.663	37.437	81.9
	100	7.439	43.463	37.437	86.1
	120	7.189	40.590	37.437	92.2
	140	7.001	38.495	37.437	97.2
	XXS	6.875	37.122	37.437	100.8
	160	6.813	36.455	37.437	102.6

Features

- Trunnion type ball for reduced operating torque.
- No tools required for removing or replacing body plug.
- Optional body cavity pressure indicator for all valves for safety. Special order.
- Body cavity venting for safety.
- More compact and lighter weight than competitive pigging valves results in lower costs.
- Double block and bleed design.
- May be used as a positive shut-off fowline valve.
- For bullet and spherical style pigs.
- Backseated stem provides blowout prevention.
- Stem lubrication capability standard.
- Self lubricating acetal copolymer material ball seats.
- 90° stem rotation and locking plates standard.
- Iso 9000 standards for quality control.
- Materials available for all media requirements.
- Plug color coded for proper field installation. “Green” for launching valves. “Red” for receiving valves.

Operating Procedure

Launching

The launching valve is installed in the flow line with the body plug facing vertically upward within 0-30 degrees.

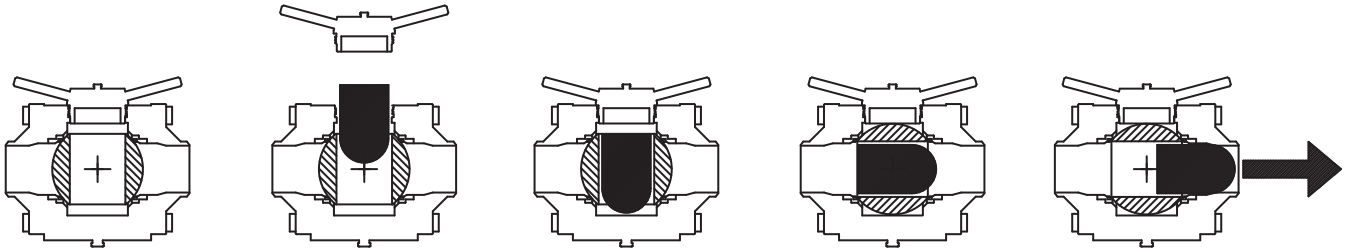

Close ball as shown open body cavity vent/bleeder valve

Remove body plug load pig

Replace body plug

Open ball as shown

Pig is launched

Receiving

The receiving valve is installed in the flow line with the body plug facing vertically downward within 0-30 degrees.

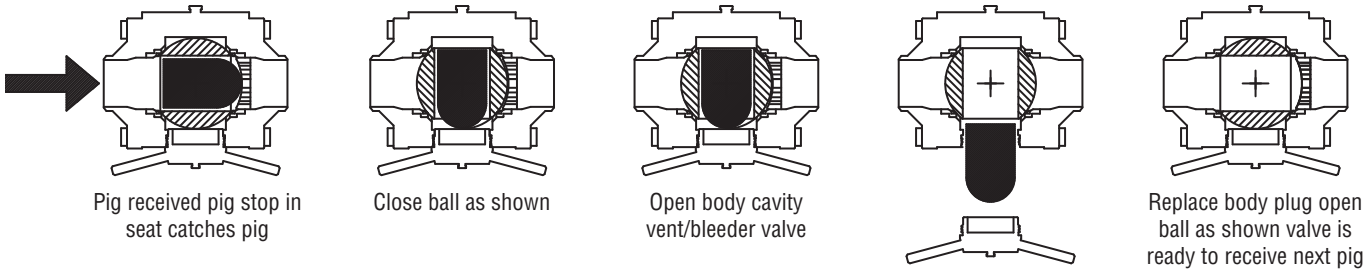

Pig received pig stop in seat catches pig

Close ball as shown

Open body cavity vent/bleeder valve

Remove body plug and pig close valve cavity vent/bleeder valve

Replace body plug open ball as shown valve is ready to receive next pig

Parts List For Model PV4 Weldneck Pig Valve

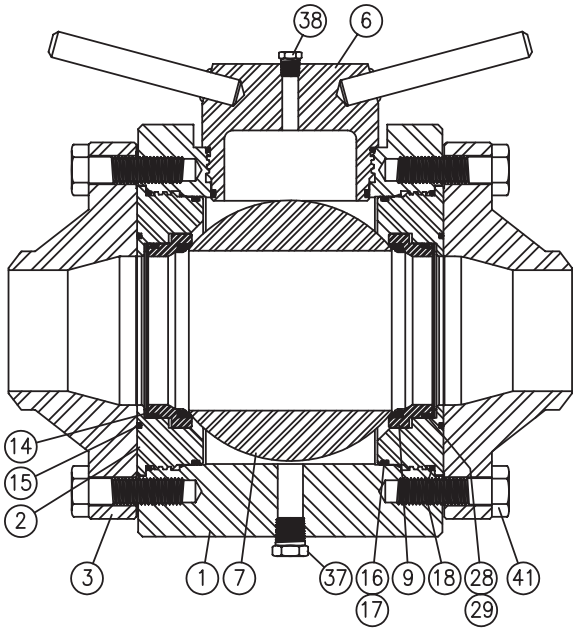

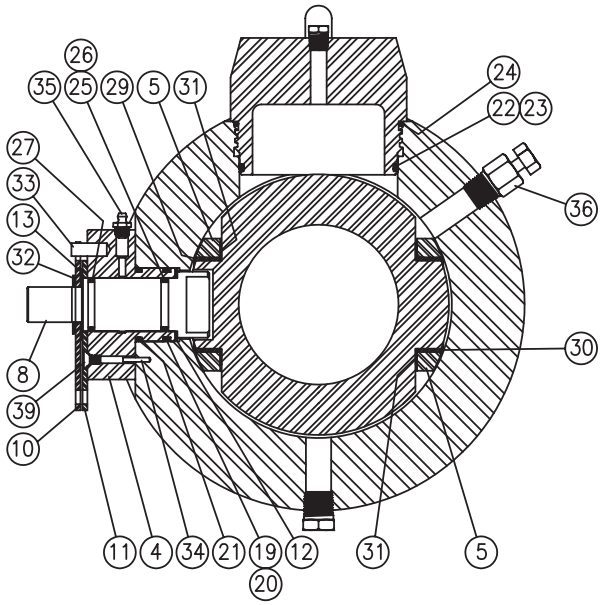

Item No.	Part Name
1	Body
2	Seat Retainer
3	Weldneck Flange
4	Bonnet
5	Trunnion Bearing Retainer
6	Pig Entry Plug
7	Ball
8	Stem
9	Seat Assembly
10	Stop Plate
11	Lock Plate
12	Stem Thrust Bearing
13	Spacer
14	Wave Spring
15	Face Seal
16	Seat Retainer / Body Seal
17	Seat Retainer / Body Back-up Ring
18	Seat Retainer / Body Seal
19	Bonnet Seal
20	Bonnet Back-up Ring
21	Bonnet Seal
22	Pig Entry Plug Seal
23	Pig Entry Plug Back-up Ring

* FOR RECEIVING VALVES ONLY

	Item No.	Part Name
	24	Pig Entry Plug Seal
	25	Stem Seal
	26	Stem Back-up Ring
	27	Stem Weather Seal
	28	Seat Assembly Seal
	29	Seat Assembly Back-up Ring
	30	Trunnion Bearing
	31	Trunnion Shim
	32	Retainer Ring
	33	Stop Pin
	34	Bonnet Positioning Pin
	35	Stem Lubrication Fitting
	36	Body Vent / Bleeder Fitting
	37	Pipe Plug
	38	Pipe Plug
	39	Lock Plate Retaining Screw
	40	Bonnet Cap Screw
	41	Weldneck Flange Cap Screw
	42	Name Plate
	43	Drive Screw
*	44	Pig Stop
*	45	Pig Stop Retainer

40, 42, 43, 44, 45 NOT SHOWN

ITEM NO'S 10, 11, 13, 32, 33, 39 OMITTED ON
6" - 600, 900, 1500
8" - 150, 300, 600, 900, 1500

Dimensions for Model PV4 Pig Valve with Weldneck Flanges

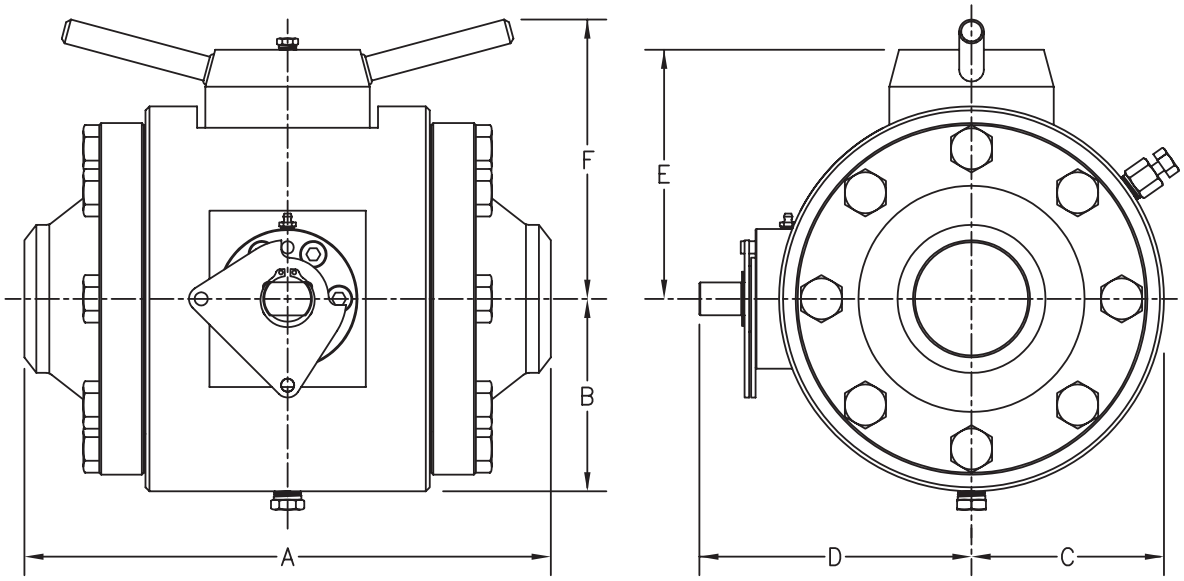

Note: Customer to specify pipe schedule on purchase order

Valve Size		A	B	C	D	E	F	Handle Length	Bullet Pig Max. Length
2"	ANSI 150	11.00	4.000	4.000	6.490	4.925	5.815	16	4.00
	ANSI 300	11.000	4.000	4.000	6.490	4.925	5.815		
	ANSI 600	11.000	4.000	4.000	6.490	4.925	5.815		
	ANSI 900	13.250	4.000	4.000	6.490	4.925	5.815		
	ANSI 1500	13.250	4.000	4.000	6.490	4.925	5.815		
3"	ANSI 150	13.000	5.000	5.000	7.570	6.675	7.425	16	5.00
	ANSI 300	13.500	5.000	5.000	7.570	6.675	7.425		
	ANSI 600	13.500	5.000	5.000	7.570	6.675	7.425		
	ANSI 900	14.750	5.000	5.000	7.570	6.675	7.425		
	ANSI 1500	15.250	5.000	5.000	7.570	6.675	7.425		
4"	ANSI 150	16.000	5.850	5.850	8.275	7.570	8.490	16	6.50
	ANSI 300	16.000	5.850	5.850	8.275	7.570	8.490		
	ANSI 600	16.000	5.850	5.850	8.275	7.570	8.490		
	ANSI 900	16.500	5.850	5.850	8.275	7.570	8.490		
	ANSI 1500	17.000	5.850	5.850	8.275	7.570	8.490		
6"	ANSI 150	19.250	8.210	8.210	10.795	10.020	10.940	16	9.25
	ANSI 300	19.250	8.210	8.210	10.795	10.020	10.940		
	ANSI 600	20.000	8.210	8.210	12.010	10.020	10.940	GEAR OPERATOR REQUIRED	
	ANSI 900	20.500	8.210	8.210	12.010	10.020	10.940		
	ANSI 1500	22.000	8.210	8.210	12.010	10.020	10.940		
8"	ANSI 150	22.500	10.000	10.000	13.985	12.050	13.220	GEAR OPERATOR REQUIRED	12.00
	ANSI 300	22.500	10.000	10.000	13.985	12.050	13.220		
	ANSI 600	24.750	10.000	10.000	14.565	12.675	13.845		
	ANSI 900	27.000	10.400	10.400	14.565	12.675	13.845		
	ANSI 1500	27.000	10.400	10.400	14.565	12.675	13.845		

DESIGN AND SPECIFICATIONS SUBJECT TO CHANGE WITHOUT NOTICE

Parts List For Model PV4 Sub-Flange Pig Valve

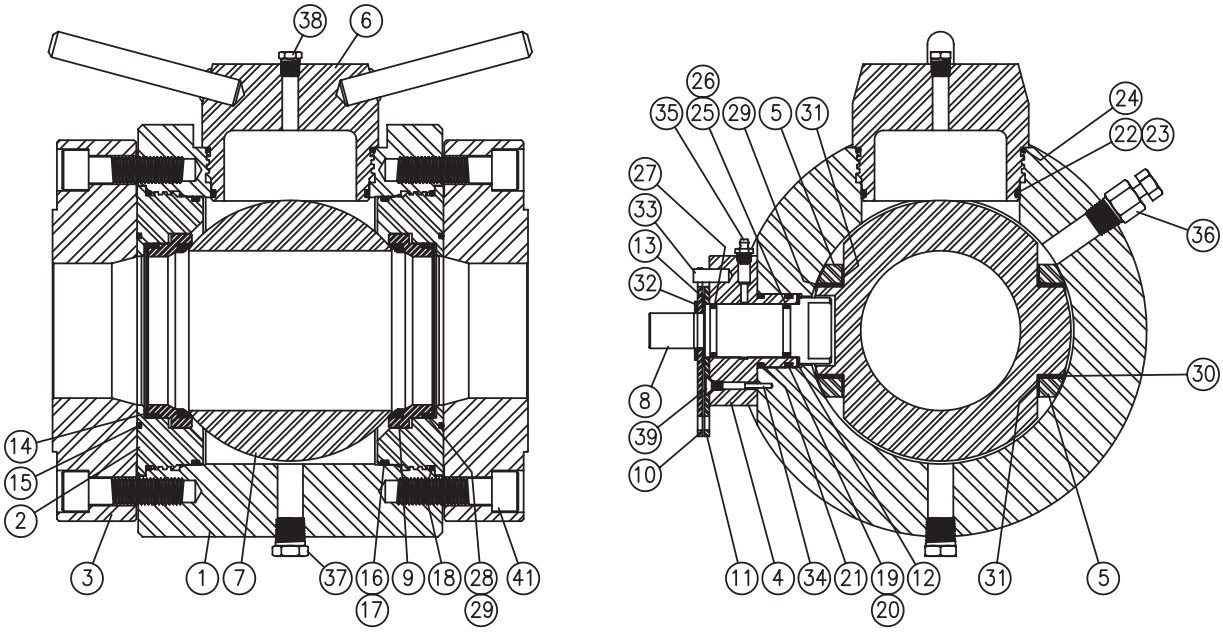

Item No.	Part Name
1	Body
2	Seat Retainer
3	Sub-flange
4	Bonnet
5	Trunnion Bearing Retainer
6	Pig Entry Plug
7	Ball
8	Stem
9	Seat Assembly
10	Stop Plate
11	Lock Plate
12	Stem Thrust Bearing
13	Spacer
14	Wave Spring
15	Face Seal
16	Seat Retainer / Body Seal
17	Seat Retainer / Body Back-up Ring
18	Seat Retainer / Body Seal
19	Bonnet Seal
20	Bonnet Back-up Ring
21	Bonnet Seal
22	Pig Entry Plug Seal
23	Pig Entry Plug Back-up Ring

* FOR RECEIVING VALVES ONLY

Item No.	Part Name
24	Pig Entry Plug Seal
25	Stem Seal
26	Stem Back-up Ring
27	Stem Weather Seal
28	Seat Assembly Seal
29	Seat Assembly Back-up Ring
30	Trunnion Bearing
31	Trunnion Shim
32	Retainer Ring
33	Stop Pin
34	Bonnet Positioning Pin
35	Stem Lubrication Fitting
36	Body Vent / Bleeder Fitting
37	Pipe Plug
38	Pipe Plug
39	Lock Plate Retaining Screw
40	Bonnet Cap Screw
41	Weldneck Sub-Flange Cap Screw
42	Name Plate
43	Drive Screw
* 44	Pig Stop
* 45	Pig Stop Retainer

40, 42, 43, 44, 45 NOT SHOWN

ITEM NO'S 10, 11, 13, 32, 33, 39 OMITTED ON
6" - 600, 900, 1500
8" - 150, 300, 600, 900, 1500

Dimensions for Model PV4 Pig Valve with Sub-Flanges

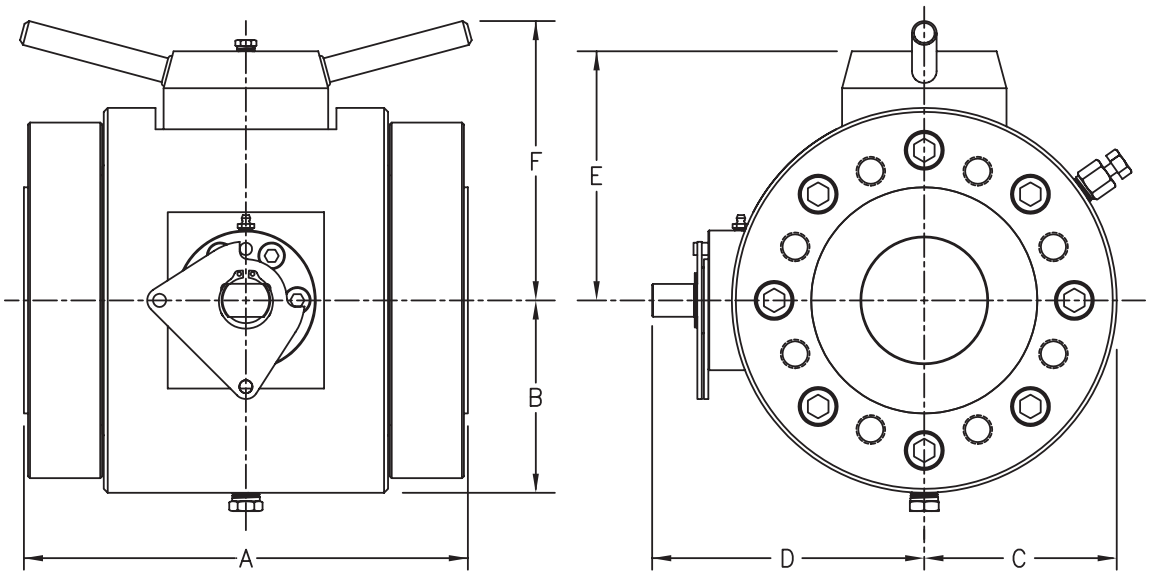

Note: Customer to specify pipe schedule on purchase order

Valve Size		A	B	C	D	E	F	Handle Length	Bullet Pig Max. Length
2"	ANSI 150	9.125	4.000	4.000	6.490	4.925	5.815	16	4.00
	ANSI 300	9.125	4.000	4.000	6.490	4.925	5.815		
	ANSI 600	9.125	4.000	4.000	6.490	4.925	5.815		
	ANSI 900	10.125	4.000	4.000	6.490	4.925	5.815		
	ANSI 1500	10.125	4.000	4.000	6.490	4.925	5.815		
3"	ANSI 150	10.250	5.000	5.000	7.570	6.675	7.425	16	5.00
	ANSI 300	10.875	5.000	5.000	7.570	6.675	7.425		
	ANSI 600	10.875	5.000	5.000	7.570	6.675	7.425		
	ANSI 900	12.000	5.000	5.000	7.570	6.675	7.425		
	ANSI 1500	12.125	5.000	5.000	7.570	6.675	7.425		
4"	ANSI 150	13.375	5.850	5.850	8.275	7.570	8.490	16	6.50
	ANSI 300	13.375	5.850	5.850	8.275	7.570	8.490		
	ANSI 600	13.500	5.850	5.850	8.275	7.570	8.490		
	ANSI 900	14.250	5.850	5.850	8.275	7.570	8.490		
	ANSI 1500	15.000	5.850	5.850	8.275	7.570	8.490		
6"	ANSI 150	16.625	8.210	8.210	10.795	10.020	10.940	16	9.25
	ANSI 300	16.625	8.210	8.210	10.795	10.020	10.940		
	ANSI 600	16.625	8.210	8.210	12.010	10.020	10.940	GEAR OPERATOR REQUIRED	
	ANSI 900	17.625	8.210	8.210	12.010	10.020	10.940		
	ANSI 1500	18.125	8.210	8.210	12.010	10.020	10.940		
8"	ANSI 150	18.625	10.000	10.000	13.985	12.050	13.220	GEAR OPERATOR REQUIRED	12.00
	ANSI 300	18.625	10.000	10.000	13.985	12.050	13.220		
	ANSI 600	20.625	10.000	10.000	14.565	12.675	13.845		
	ANSI 900	22.500	10.400	10.400	14.565	12.675	13.845		
	ANSI 1500	22.500	10.400	10.400	14.565	12.675	13.845		

DESIGN AND SPECIFICATIONS SUBJECT TO CHANGE WITHOUT NOTICE

Parts List for Model PV4 10" & 12" Weldneck Pig Valve

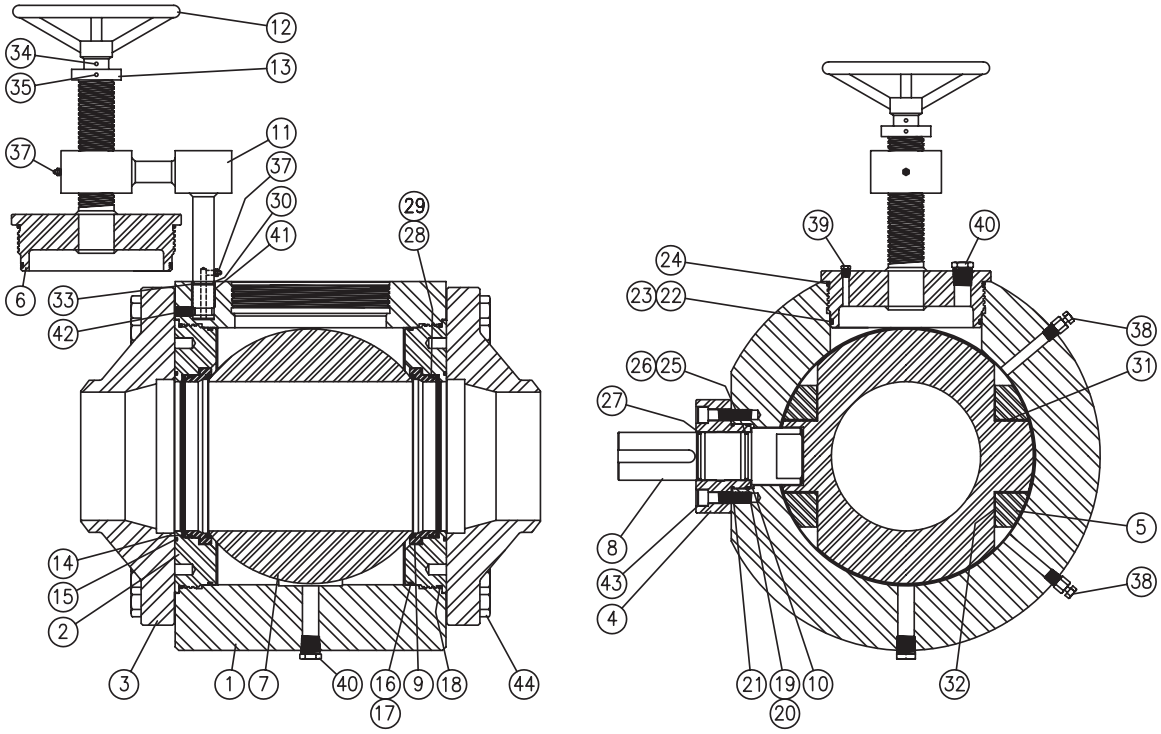

Item No.	Part Name
1	Body
2	Seat Retainer
3	Weldneck Flange
4	Bonnet
5	Trunnion Bearing Retainer
6	Pig Entry Plug Assembly
7	Ball
8	Stem
9	Seat Assembly
10	Stem Thrust Bearing
11	Pivot Arm Assembly
12	Hand Wheel
13	Collar
14	Wave Spring
15	Face Seal
16	Seat Retainer / Body Seal
17	Seat Retainer / Body Back-up Ring

Item No.	Part Name
18	Seat Retainer / Body Seal
19	Bonnet Seal
20	Bonnet Back-up Ring
21	Bonnet Seal
22	Pig Entry Plug Seal
23	Pig Entry Plug Back-up Ring
24	Pig Entry Plug Seal
25	Stem Seal
26	Stem Back-up Ring
27	Stem Weather Seal
28	Seat Assembly Seal
29	Seat Assembly Back-up Ring
30	Pivot Arm Weather Seal
31	Trunnion Bearing
32	Trunnion Shim
33	Retainer Ring
34	Hand Wheel Pin

Item No.	Part Name
35	Collar Pin
36	Stem Lubircation Fitting
37	Pivot Arm Lubrication Fitting
38	Body Vent / Bleeder Fitting
39	Pipe Plug
40	Pipe Plug
41	Pivot Shaft Bearing
42	Half Dog Set Screw
43	Bonnet Cap Screw
44	Weldneck Flange Cap Screw
* 45	Pig Stop
* 46	Pig Stop Retainer
47	Gear Operator Mounting Plate
48	Gear Operator
49	Gear Operator Mounting Cap Screw
50	Name Plate
51	Drive Screw

* FOR RECEIVING PIG VALVES ONLY

NOT SHOWN 36, 45, 46, 47, 48, 49, 50, 51

Dimensions for Model PV4 10" &12" Weldneck Pig Valve

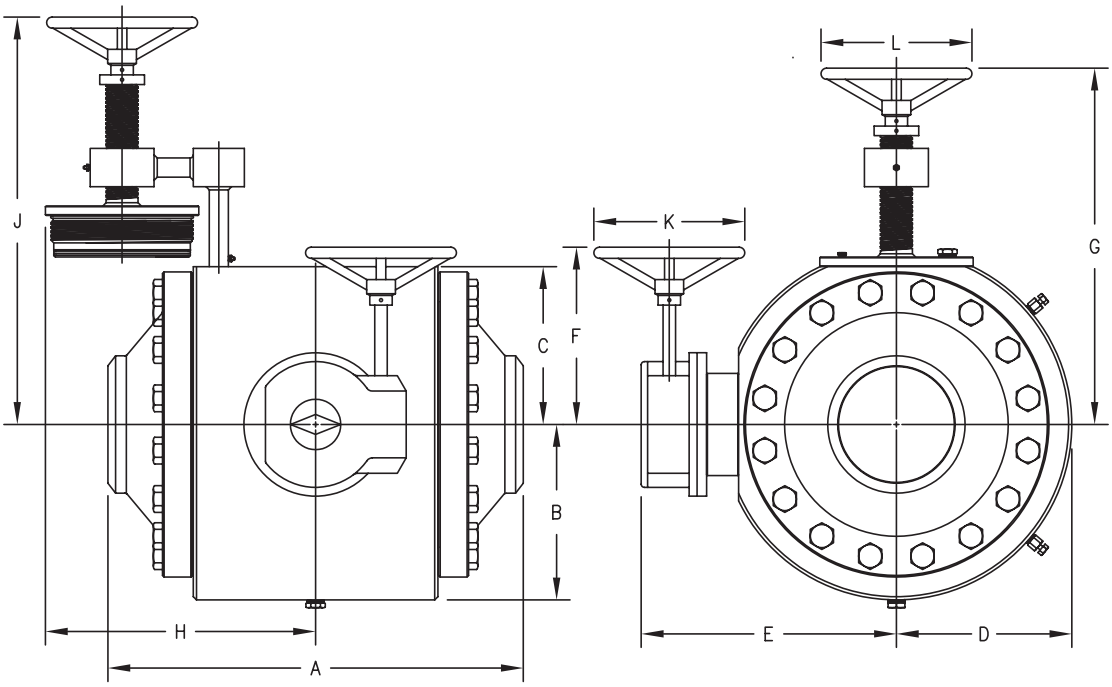

Note: Customer to specify pipe schedule on purchase order

Valve Size		A	B	C	D	E	F	G	H	J	K	L
10"	ANSI 150	31.50	13.72	12.35	13.72	19.98	13.87	27.88	21.14	31.88	11.81	11.81
	ANSI 300	31.50	13.72	12.35	13.72	19.98	13.87	27.88	21.14	31.88	11.81	11.81
	ANSI 600	32.50	13.72	12.35	13.72	19.98	13.87	27.88	21.14	31.88	11.81	11.81
	ANSI 900	33.00	13.72	12.35	13.72	19.98	13.87	27.88	21.14	31.88	11.81	11.81
	ANSI 1500	36.00	13.72	12.35	13.72	19.98	13.87	27.88	21.14	31.88	11.81	11.81
12"	ANSI 150	34.00	15.75	14.10	15.75	23.22	15.83	29.63	24.33	33.63	15.75	11.81
	ANSI 300	34.00	15.75	14.10	15.75	23.22	15.83	29.63	24.33	33.63	15.75	11.81
	ANSI 600	35.00	15.75	14.10	15.75	23.22	15.83	29.63	24.33	33.63	15.75	11.81
	ANSI 900	36.00	15.75	14.10	15.75	23.22	15.83	29.63	24.33	33.63	15.75	11.81
	ANSI 1500	41.00	15.75	14.10	15.75	23.22	15.83	29.63	24.33	33.63	15.75	11.81

DESIGN AND SPECIFICATIONS SUBJECT TO CHANGE WITHOUT NOTICE

Pig Valve Assembly Base Number

Class		2"	3"	4"	6"	8"	10"	12"
ANSI 150	PV3 BASE NO.	NA	3031	3041	3061	3081	3101	3121
	PV4 BASE NO.	4021	4031	4041	4061	4081	4101	4121
ANSI 300	PV3 BASE NO.	NA	3032	3042	3062	3082	3102	3122
	PV4 BASE NO.	4022	4032	4042	4062	4082	4102	4122
ANSI 600	PV3 BASE NO.	NA	3033	3043	3063	3083	3103	3123
	PV4 BASE NO.	4023	4033	4043	4063	4083	4103	4123
ANSI 900	PV3 BASE NO.	NA	3034	3044	3064	3084	3104	3124
	PV4 BASE NO.	4024	4034	4044	4064	4084	4104	4124
ANSI 1500	PV3 BASE NO.	NA	3035	3045	3065	3085	NA	NA
	PV4 BASE NO.	4025	4035	4045	4065	4085	4105	4125
ANSI 2500	PV3 BASE NO.	NA	3036	3046	3066	3086	NA	NA
	PV4 BASE NO.	4026	4036	4046	4066	4086	NA	NA
ANSI 2000	PV3 BASE NO.	NA	3636	3646	3666	3686	NA	NA
	PV4 BASE NO.	4626	4636	4646	4666	4686	NA	NA
ANSI 3000	PV3 BASE NO.	NA	3638	3648	3668	3688	NA	NA
	PV4 BASE NO.	4628	4638	4648	4668	4688	NA	NA
ANSI 5000	PV3 BASE NO.	NA	3639	3649	3669	3689	NA	NA
	PV4 BASE NO.	4629	4639	4649	4669	4689	NA	NA

Model PV3 Pig Valve Assembly Part Numbers

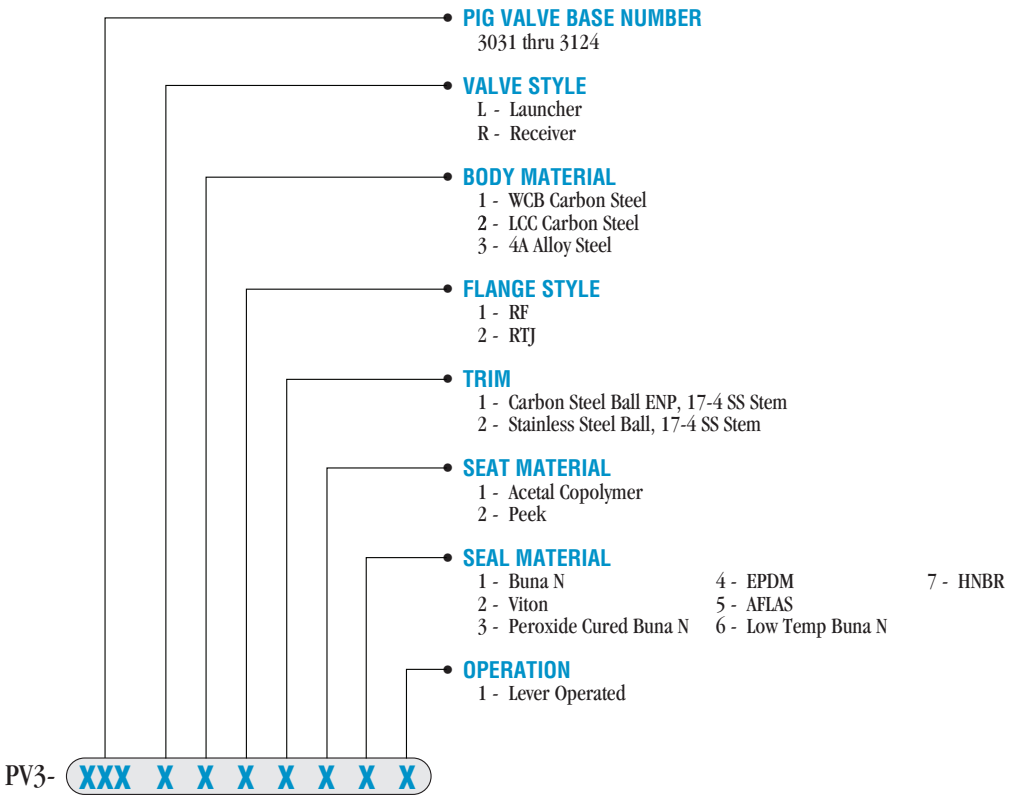

Model PV4 Pig Valve Assembly Part Numbers

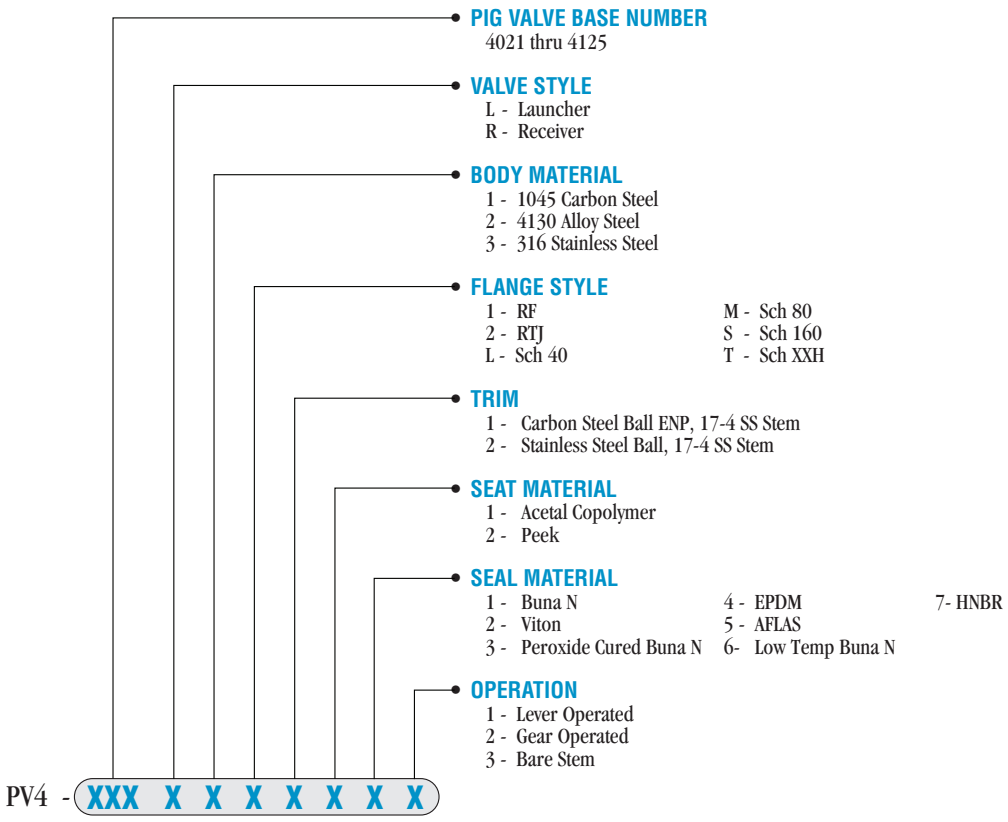

GUARANTEE AND DISCLAIMER OF WARRANTIES

ACECO hereby warrants that all Products manufactured by ACECO are free of defects of material and workmanship for a period of one (1) year from the date shipped, providing that such Products are used in the service and within the pressure ranges for which they have been manufactured. EXCEPT FOR THE FOREGOING EXPRESS WARRANTY, ACECO DISCLAIMS ALL WARRANTIES, EXPRESS OR IMPLIED, INCLUDING WITHOUT LIMITATION, THE IMPLIED WARRANTIES OF MERCHANTABILITY AND FITNESS FOR A PARTICULAR PURPOSE. ACECO'S SOLE OBLIGATION, AND THE EXCLUSIVE REMEDY OF THE PURCHASER, UNDER THE EXPRESS WARRANTY CREATED HEREBY IS LIMITED TO, AT ACECO'S OPTION, (I) REPAIR OR REPLACEMENT OF ANY DEFECTIVE PRODUCT OR (II) REDUCTION OF A REASONABLE PORTION OF THE DEFECTIVE PRODUCT'S PURCHASE PRICE. THE STATED WARRANTY AND REMEDY PROVIDED ARE IN LIEU OF THE POSSIBLE LIABILITY AND DAMAGES AGAINST ACECO AND IN NO EVENT SHALL ACECO BE LIABLE FOR SPECIAL, INDIRECT OR CONSEQUENTIAL DAMAGES RESULTING FROM A BREACH OF THIS WARRANTY OR ANY OTHER PROVISION OF THESE TERMS & CONDITIONS OF SALE OR OTHERWISE ARISING OUT OF OR IN CONNECTION WITH THE PRODUCTS OR THEIR SALE, DELIVERY, DISTRIBUTION, INSTALLATION, MAINTENANCE, OPERATION, SERVICE, PERFORMANCE OR USE, INCLUDING, WITHOUT LIMITATION, ANY LOSS OR USE, LOST REVENUES, LOST PROFITS, DAMAGE TO ASSOCIATED EQUIPMENT OR TO FACILITIES, COSTS OF SUBSTITUTE EQUIPMENT, FACILITIES OR SERVICES, AND ANY SIMILAR OR DISSIMILAR LOSSES, COSTS OR DAMAGES. No agent or representative of ACECO is authorized to vary or add to the said terms and conditions or otherwise to make any representation whatsoever to the Purchaser which shall modify the said terms and conditions including affirmations of fact or promises that can create express warranties.

These Terms & Conditions of Sale and the agreement between ACECO and the Purchaser shall be construed in accordance with the laws of the State of Oklahoma (but not including any of its conflict of law rules which would direct or refer to the laws of another jurisdiction). Because performance, by way of payment, is required to be made at the offices of ACECO in Mounds, Oklahoma, venue of any dispute or suit arising directly or indirectly hereunder shall lie within an Oklahoma State District Court in and for Okmulgee County, Oklahoma or in the United States District Court for Eastern Oklahoma. In the event suit, action, or seizure is instituted to enforce or interpret any right granted to ACECO herein, ACECO shall be entitled to recover from the Purchaser, in addition to any other relief, ACECO's reasonable attorney's fees, costs and expenses.

2300 Alternate 75 Highway
P.O. Box 339
Mounds, Oklahoma 74047
(918) 827-3669
FAX (918) 827-6092
www.acecovalves.com

ISO9001 WCS UKAS
Certificate No. 6342

Distributed By: